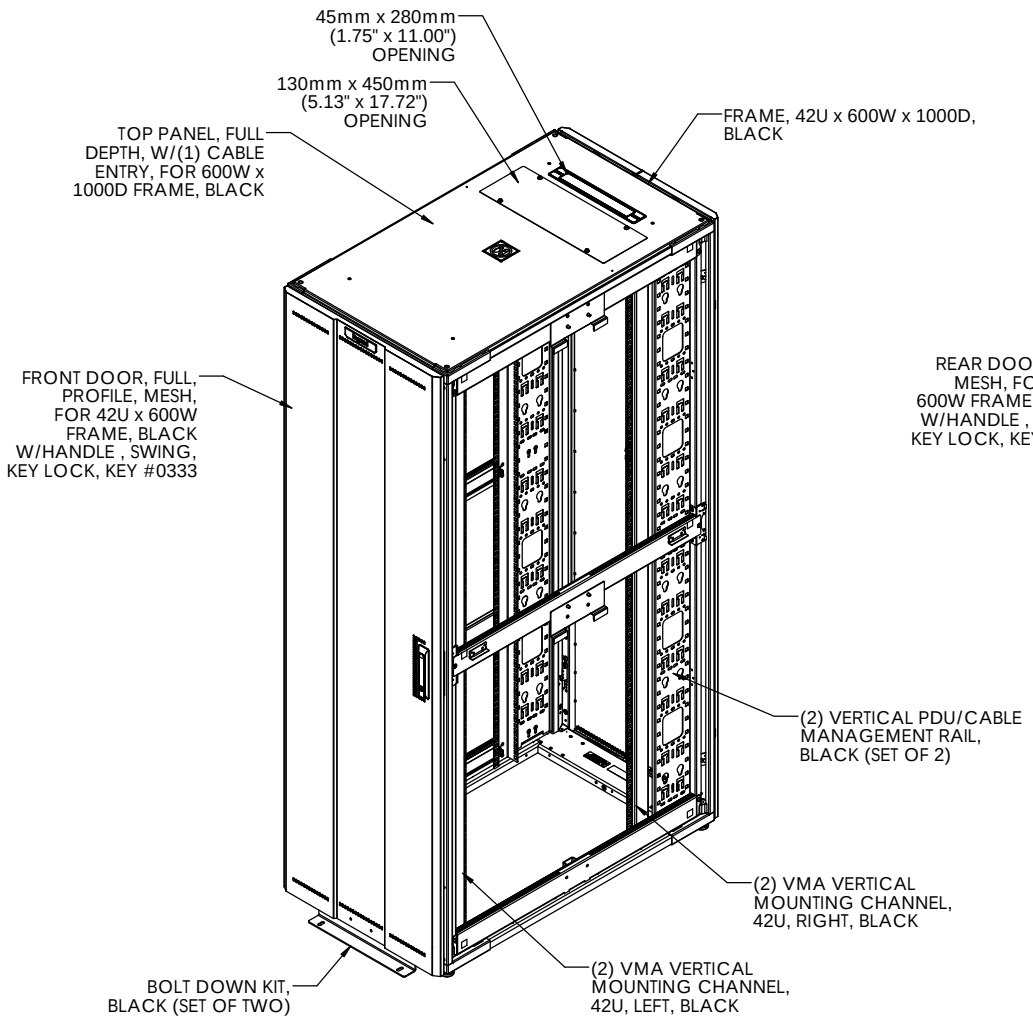

FRONT ISOMETRIC VIEW
(SIDE PANELS REMOVED FOR VIEWING)

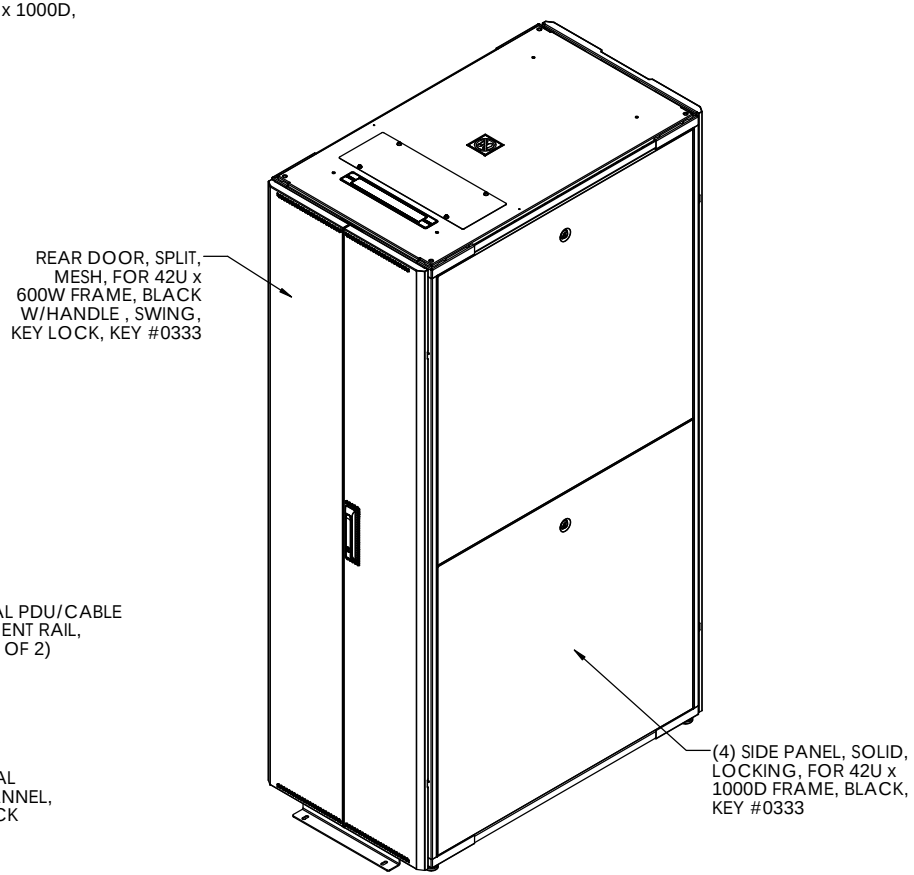

REAR ISOMETRIC VIEW

ALSO INCLUDED:
(1) CABINET BAYING KIT (SET OF 4)
(1) MOUNTING HARDWARE (SET OF 50) NUT/SCREW/CUP W/TOOL

*** NOTICE ***
THIS DOCUMENT CONTAINS CONFIDENTIAL AND/OR PROPRIETARY INFORMATION INTENDED FOR USE ONLY BY THE INDIVIDUAL(S) PROVIDED. NEITHER THIS DOCUMENT, NOR ANY INFORMATION CONTAINED HEREIN, MAY BE COPIED, DISTRIBUTED, DISCLOSED TO ANY THIRD PARTY OR USED IN ANY MANNER OTHER THAN FOR WHICH IT HAS BEEN PROVIDED, WITHOUT THE PRIOR WRITTEN CONSENT OF ORTRONICS, INC.

legrand®
WWW.LEGRAND.US

TITLE
Q-SERIES SERVER CABINET,
42U x 600W x 1000D, BLACK

	NAME	DATE
DWN	JT	5/20/2015
CHK	CAC	5/21/2015
APPR	CV	5/21/2015

SIZE	CAD FILE	DWG NO	REV
C	QC422442C	OR-QC422442	01

SCALE 1:10
SHEET 1 OF 2

EIA RAILS FACTORY PLACEMENT FOR A SERVER CABINET

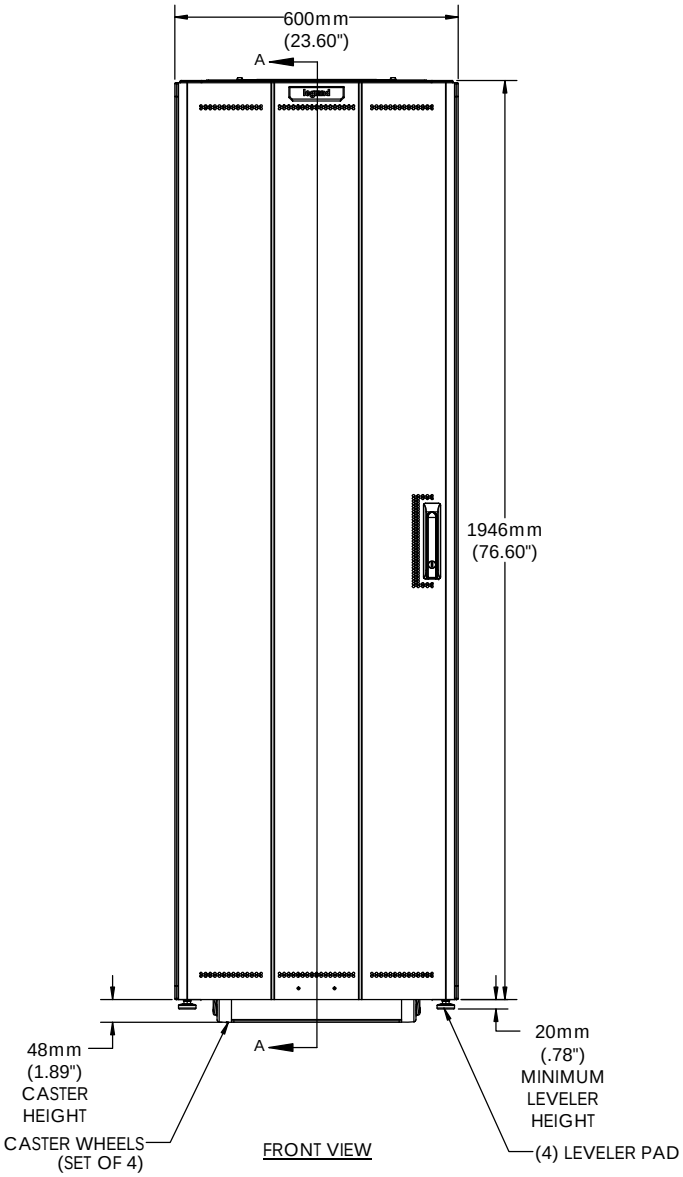

FRONT VIEW

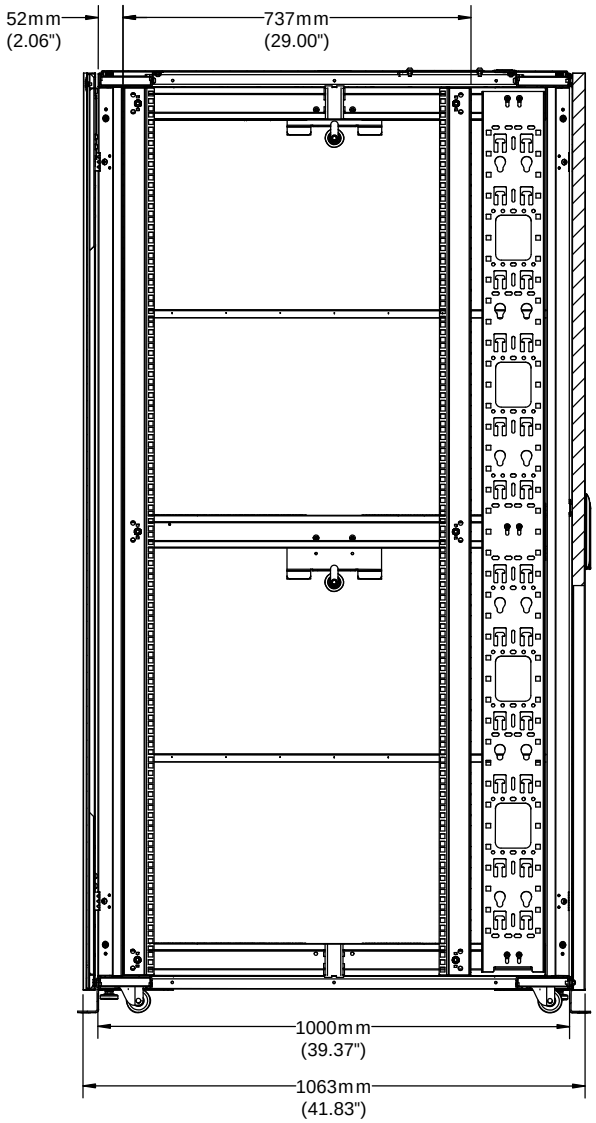

SECTION A-A

legrand® WWW.LEGRAND.US

SIZE	CAD FILE	DWG NO	REV
C	QC422442C	OR-QC422442	01
SCALE 1:8		SHEET 2 OF 2	