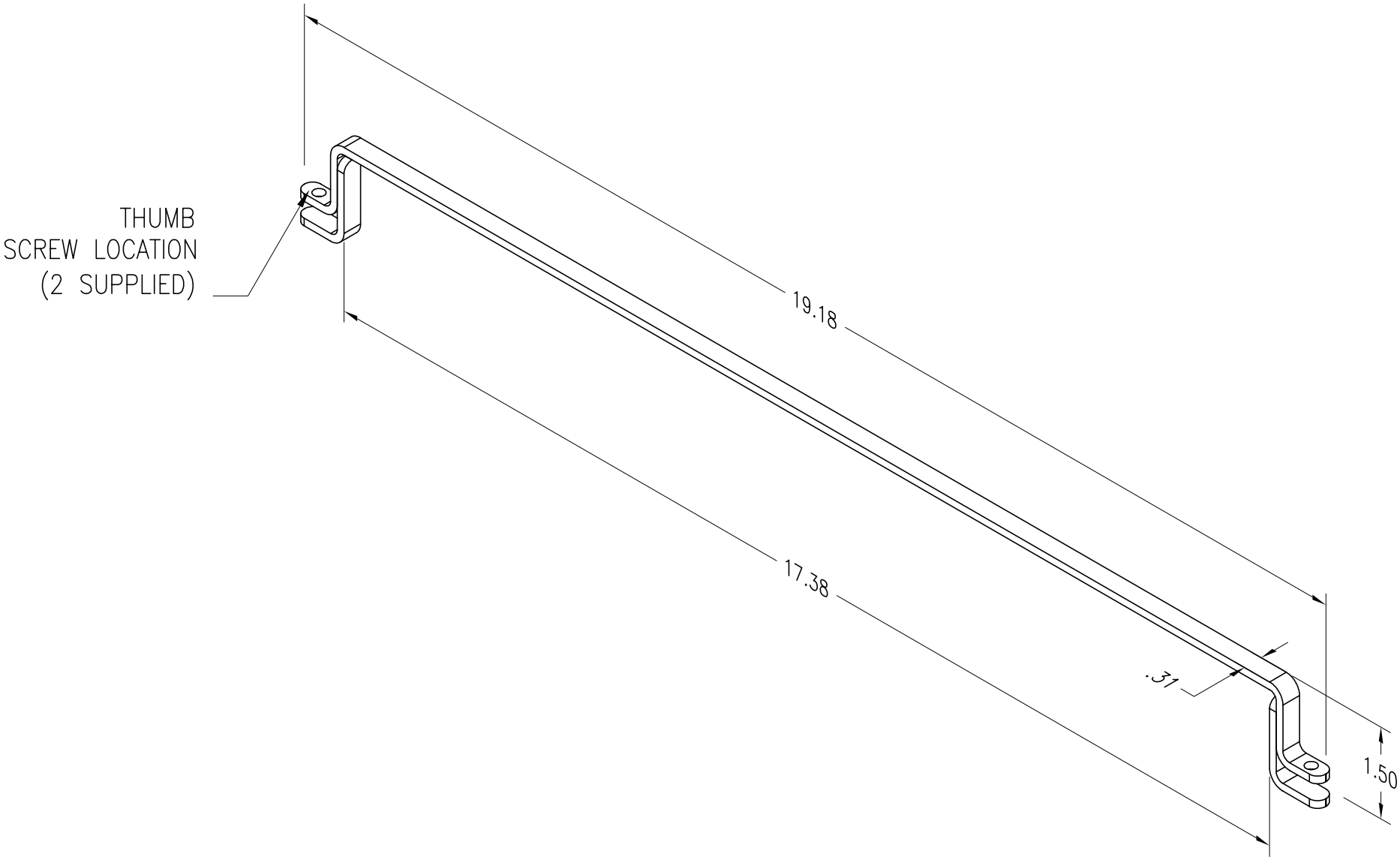

*** NOTICE ***
THIS DOCUMENT CONTAINS CONFIDENTIAL AND/OR PROPRIETARY INFORMATION INTENDED FOR USE ONLY BY THE INDIVIDUAL(S) SPECIFIED HEREIN AND ONLY FOR THE PURPOSE(S) PROVIDED. NEITHER THIS DOCUMENT, NOR ANY INFORMATION CONTAINED HEREIN, MAY BE COPIED, DISTRIBUTED, DISCLOSED TO ANY THIRD PARTY OR USED IN ANY MANNER OTHER THAN FOR WHICH IT HAS BEEN PROVIDED, WITHOUT THE PRIOR WRITTEN CONSENT OF ORTRONICS, INC.

ORTRONICS
NEW LONDON, CT 06320
(860) 445-3800

DWN.BY: R.POWER	DATE 09/11/02		
CHK.BY:			
APP.BY:			

TITLE: CABLE MANAGEMENT SUPPORT BAR

SIZE	CAD FILE	PART NUMBER	REV
A	60400046C	OR-60400046	01

SCALE	DATE	SHEET
NONE	09/11/02	1 OF 1