REVISIONS					
ECN#	ZONE	REV	DESCRIPTION	BY	DATE

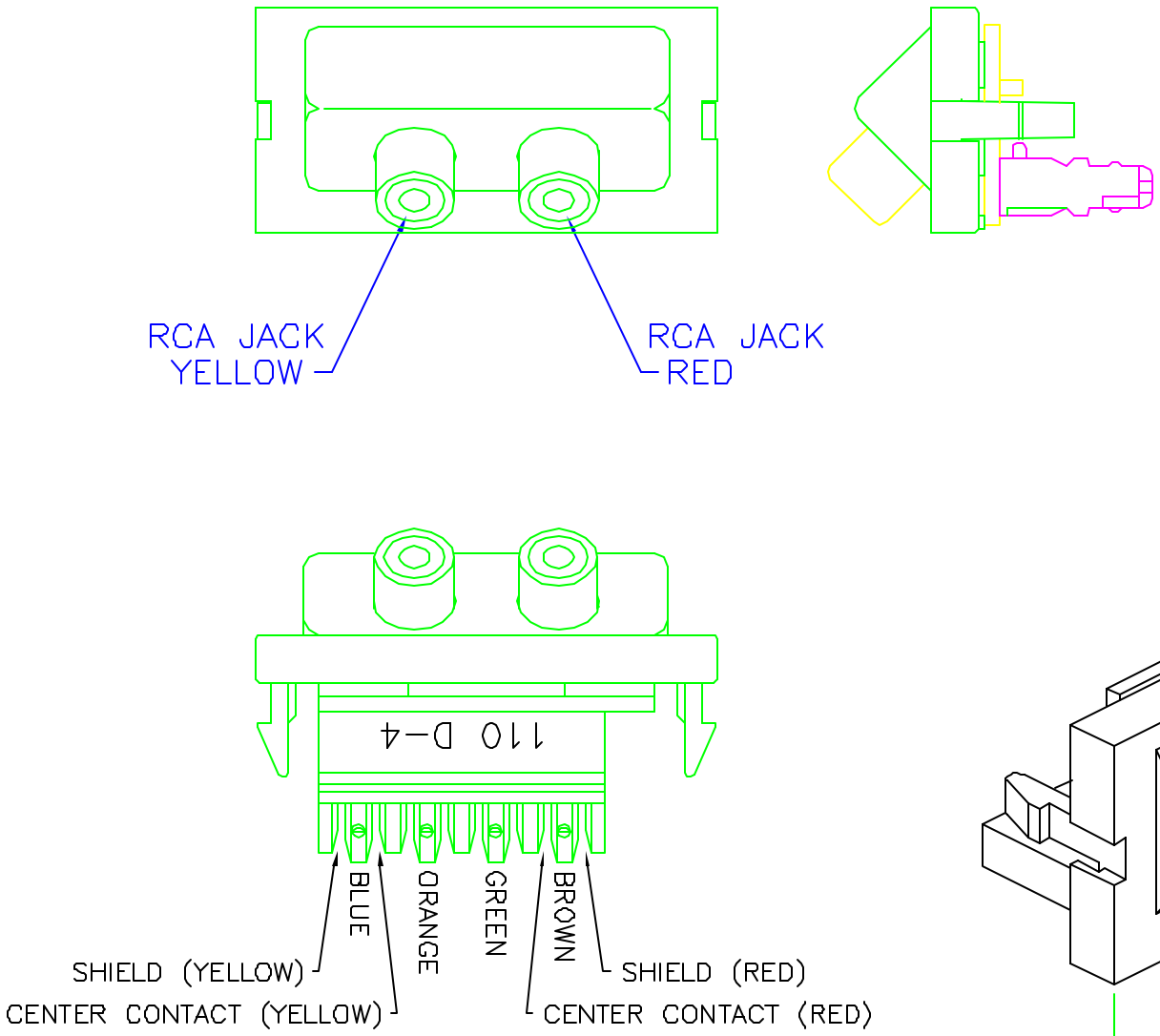

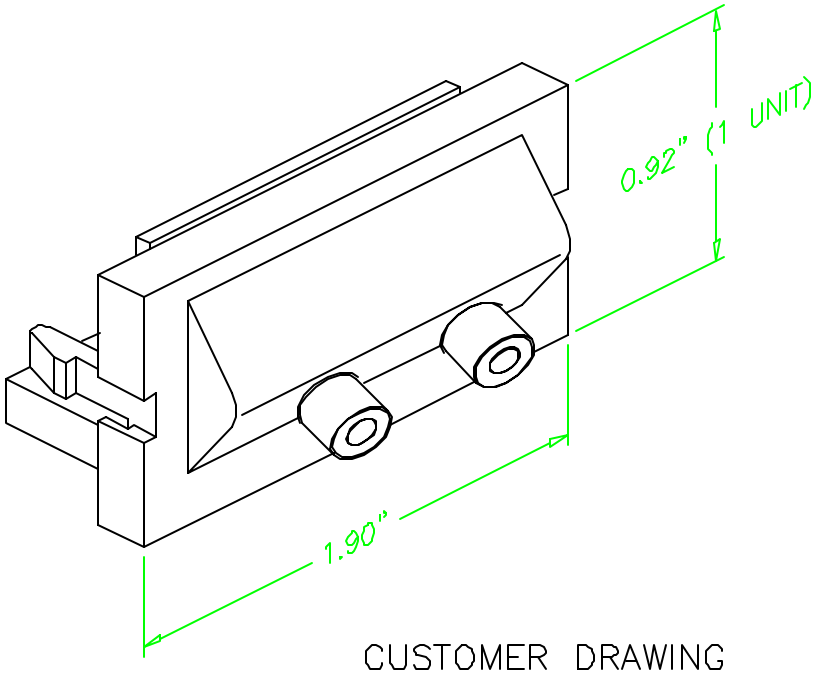

CUSTOMER DRAWING

*** NOTICE ***
THIS DOCUMENT CONTAINS CONFIDENTIAL AND/OR PROPRIETARY INFORMATION INTENDED FOR USE ONLY BY THE INDIVIDUAL(S) SPECIFIED HEREIN AND ONLY FOR THE PURPOSE(S) PROVIDED. NEITHER THIS DOCUMENT, NOR ANY INFORMATION CONTAINED HEREIN, MAY BE COPIED, DISTRIBUTED, DISCLOSED TO ANY THIRD PARTY OR USED IN ANY MANNER OTHER THAN FOR WHICH IT HAS BEEN PROVIDED, WITHOUT THE PRIOR WRITTEN CONSENT OF ORTRONICS, INC.

ORTRONICS
Pawcatuck, CT 06379
(860) 599-1760

DWN.BY: R. IVERS	DATE 01/29/98
CHK.BY:	
APP.BY:	

TITLE: SERIES II, 2/RCA, 1 RED, 1 YELLOW, TO 110
45 DEGREE, FOG WHITE

SIZE	CAD FILE	PART NUMBER	REV
A	609\00224C	OR-60900224	00

SCALE	DATE	SHEET
NONE	01/29/98	1 OF 1