Wiremold
Evolution 6AT Series Bottom Housing Assembly
Part No. 5PTHA

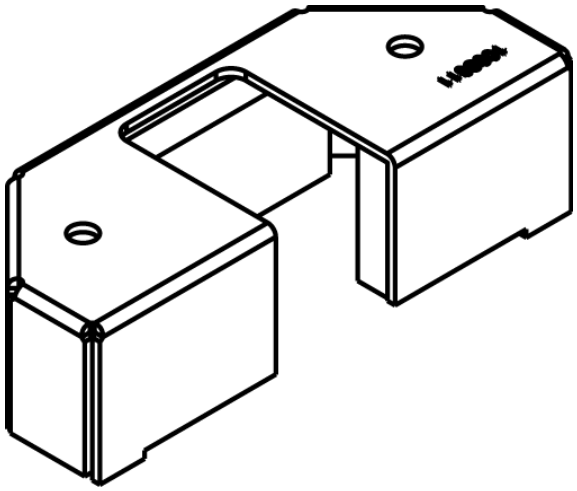

Half-gang pass through housing assembly. Designed to allow pass through of communication cables when no conduit is required. For use on side compartments only.

Features & Benefits

Half-gang pass through housing assembly. Designed to allow pass through of communication cables when no conduit is required. For use on side compartments only.

Specifications

General Info

Product Line	Wiremold	UPC Number	786564060284
Country Of Origin	United States	Construction	Not Assembled
Application Sector	Commercial	Standard	cULus Listed Metallic Outlet Boxes: File E2961 Guide QCIT. cULus Listed Nonmetallic Outlet Boxes & Fittings Classified for Fire Resistance: File R8209 Guide CEYY. Meets Article 300.21 & 300.22(C) & 314 of NEC.
Type	Poke-Thru		

Listing Agencies / 3rd Party Agencies

cULus ListingNumber	E2961	cULus Listed	Yes

Additional Information

RoHS Conformant	Yes	Product Environmental Profile	Yes