Wiremold

880W1818TCAL Series One-Gang Steel Floor Box for Wood Floors

Part No. 880W1818TCAL

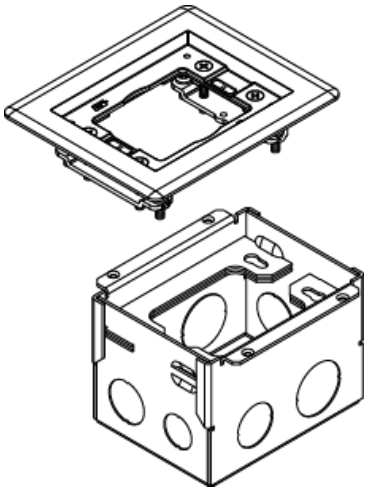

880W1 Floor Box with 818TCAL Brushed Aluminum Flange included. Flange can be used for tile or carpet applications. Order cover separately.

Features & Benefits

880W1 Floor Box with 818TCAL Brushed Aluminum Flange included. Flange can be used for tile or carpet applications. Order cover separately.

Specifications

General Info

Product Line	Wiremold	UPC Number	786564054603
Country Of Origin	Mexico	Construction	Assembled
Application Sector	Commercial	Standard	cULus Listed Metallic Outlet Boxes: File E2961 Guide QCIT. Meets Article 314.27(C) of NEC.
Type	Floor Box		

Listing Agencies / 3rd Party Agencies

cULus ListingNumber	E2961	cULus Listed	Yes

Buy American Act Compliance

NAFTA	Yes

Additional Information

RoHS Compliant	Yes

Technical Information

Cable Entry	Through Floor