Cablofil

WALL TERMINATION KIT-PREGALV (INCL. HARDWARE)(2D,,2W,,9.5L) [942419]

Part No. 942419

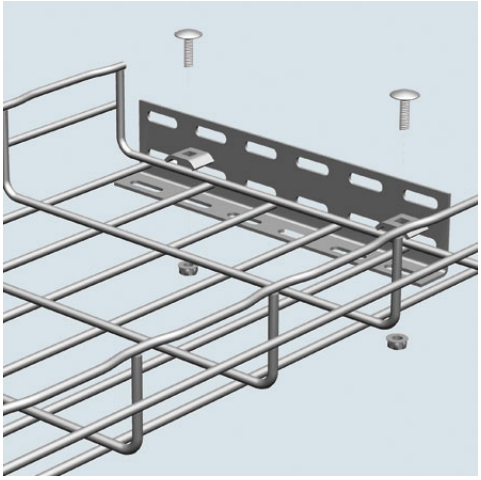

Cablofil Wiremesh Cable Tray concept based upon performance, safety and economy; three qualities which make Cablofil Wiremesh Cable Tray system preferred by installers. Cablofil adapts to the most complex configurations, and its structure gives maximum strength for minimum weight. The ease of creating fittings, carried out on site, as well as the wide range of unique and universal accessories gives complete freedom in routing combined with exceptionally fast installation.

Features & Benefits

0Slotted design adapts to any configuration. Kit contains two EZ BN 1/4 and two CE 25 with one HB2.

Specifications

General Info

Product Line	Cablofil	Finish	Pre-Galvanized
UPC Number	800388012202	Country Of Origin	China
Application Sector	Commercial, Industrial	Type	Supports

Dimensions

Product Width US	2.0 in	Product Weight US	0.5 lb
Product Volume US	0.022 cu ft	Product Depth US	9.43 in
Product Height US	2.0 in		

Additional Information

RoHS Compliant	Yes	Product Environmental Profile	Yes