Cablofil

CH4KITEZ - 4" EMT RIGID HGR KIT [943201]

Part No. 943201

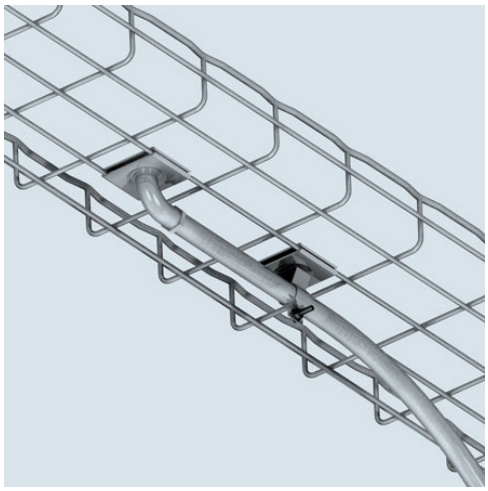

Cablofil Wiremesh Cable Tray concept based upon performance, safety and economy; three qualities which make Cablofil Wiremesh Cable Tray system preferred by installers. Cablofil adapts to the most complex configurations, and its structure gives maximum strength for minimum weight. The ease of creating fittings, carried out on site, as well as the wide range of unique and universal accessories gives complete freedom in routing combined with exceptionally fast installation.

Features & Benefits

Secures conduit to Cablofil tray.

CE 40 CC attaches 1/2'' to 1-1/4'' conduit diameters.

CH Kit includes: two CE 40 washers, one EZ BN 1/4 and one Conduit Hanger.

For Bottom Mounting - works with all Cablofil tray. For Side Mounting - works only with CF 105 and CF 150 tray series.

CH Kit secures 1/2'' to 4'' conduit diameters.

Specifications

General Info

Product Line	Cablofil	Finish	Electroplated Zinc
UPC Number	800388469020	Country Of Origin	United States
Application Sector	Commercial, Industrial	Type	Accessories

Dimensions

Product Width US	4.5 in	Product Weight US	0.97 lb
Product Volume US	0.024 cu ft	Product Depth US	6.75 in
Product Height US	1.375 in		

Buy American Act Compliance

BAA	Yes

Additional Information

Product Environmental Profile	Yes