Cablofil

1/2" EMT FITTING CONDUIT ATTACH (10 PCS)

Part No. 945210

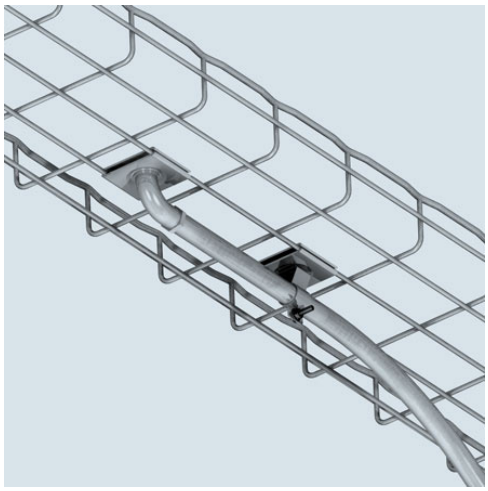

Cablofil Wiremesh Cable Tray concept based upon performance, safety and economy; three qualities which make Cablofil Wiremesh Cable Tray system preferred by installers. Cablofil adapts to the most complex configurations, and its structure gives maximum strength for minimum weight. The ease of creating fittings, carried out on site, as well as the wide range of unique and universal accessories gives complete freedom in routing combined with exceptionally fast installation.

Features & Benefits

Secures conduit to Cablofil tray.

CE 40 CC attaches 1/2'' to 1-1/4'' conduit diameters.

CH Kit includes: two CE 40 washers, one EZ BN 1/4 and one Conduit Hanger.

For Bottom Mounting - works with all Cablofil tray. For Side Mounting - works only with CF 105 and CF 150 tray series.

CH Kit secures 1/2'' to 4'' conduit diameters.

Specifications

General Info

Product Line	Cablofil	Finish	Custom Painted
Country Of Origin	United States		

Dimensions

Product Weight US	1.168 lb