Cablofil
CabloBend150/300EZ
Part No. 945472

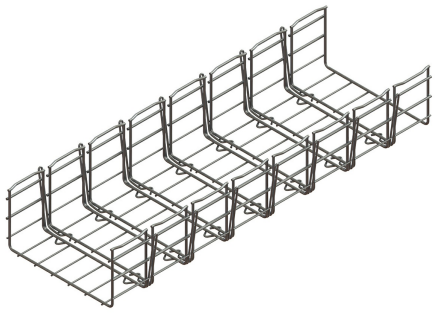

Every data center requires numerous cable tray bends and drops—sometimes thousands in just one installation. With traditional cutting and bending, each drop can take over four hours to complete. With Cablobend Systems, you have the freedom to flexibly create the bends and drops that you need. No more cutting unless shortening the length.

Features & Benefits

Adjustable mesh tray fitting.

Shrink your installation time to just minutes per bend with zero cutting required on thousands of bends in a single project.

Available in three heights (2"", 4"" and 6""), five widths (6"", 8"", 12"", 18"" and 24"") and two finishes (EZ and BL).

Rigidity clips included to fasten sections together for added strength depending on your needs.

Easy-to-bend flex wires. The quickest up-and-down bends in the industry.

Wide range of adjustability. Vertical and horizontal angle adjustability to 90° to fit any configuration.

Safer installation, no need for cutting tools and less time on elevated areas for installation.

Pre-made and pre-assembled for increased prefab efficiency.

Specifications

General Info

Product Line	Cablofil	Color	Silver
Finish	Electroplated Zinc	UPC Number	800388484580
Country Of Origin	United States	Application Sector	Commercial, Industrial
Type	Bends		

Dimensions

Product Width US	12.0 in	Product Weight US	5.0 lb
Product Volume US	1.667 cu ft	Product Depth US	23.0 in

Product Height US	6.0 in

Listing Agencies / 3rd Party Agencies

cULus Listed	Yes

Buy American Act Compliance

BAA	Yes	TAA Compliant	Yes
NAFTA	Yes		

Additional Information

RoHS Compliant	Yes