Cablofil
TROUGH - BLACK (4D,20W,120L)
Part No. 960007

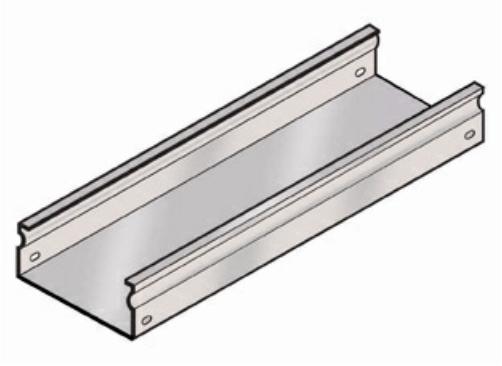

Cablofil Fiber Trough utilizes high strength steel components to provide the strength and durability required to manage fiber cabling requirements in the most demanding data center environments.

Features & Benefits

Strong corrosion resistant steel construction.

Unique Design: allows cover to snap on.

Rolled Edge: for cable protection.

18 gage steel (t).

Specifications

General Info

Product Line	Cablofil	Finish	Custom Painted
UPC Number	800388242043	Country Of Origin	Italy

Dimensions

Product Width US	19.7 in	Product Weight US	43.1 lb
Product Volume US	5.229 cu ft	Product Depth US	117.6 in
Product Height US	3.9 in		

Buy American Act Compliance

BAA	Yes