Cablofil
4" Stainless Steel Straight Sections
Part No. P021809

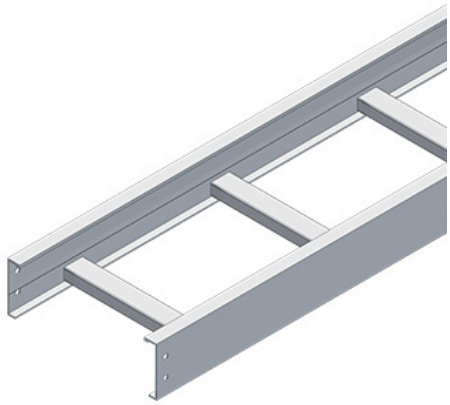

Choose from an extensive selection of metallic ladder tray with a variety of rung and bottom styles to choose from. Finishes include steel, 304L and 316L stainless steel to meet the needs of any application. Rail heights range from 4"" to 7"" and width sizes are available up to 36"".

Features & Benefits

Unitized welded construction

Specifications

General Info

Product Line	Cablofil	Finish	S6
UPC Number	800388498860	Country Of Origin	Mexico

Dimensions

Product Width US	24.0 in	Product Weight US	55.702 lb
Product Volume US	6.667 cu ft	Product Depth US	120.0 in
Product Height US	4.0 in		

Buy American Act Compliance

BAA	Yes