Cablofil
Horizontal Reducers
Part No. P036083

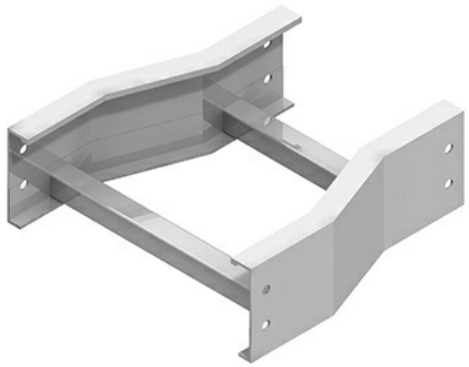

The aluminum I-beam design of ITray is perfect for industrial installations with large diameter cables in long span situations, minimizing total tray width and creating a smooth transition between straight sections and fittings. A structural offset in the sidewall creates strong, mid-span splices that need fewer supports. Each splice snaps in place and stays without holding, Additionally, only four bolts are needed for each splice reducing hardware needs by 50%. These features allow Itray to be installed up to 30% faster than standard tray.

Features & Benefits

Material: Aluminum Alloy 6063

Finish: Plain

Bottom: LD: 1'' wide rungSB: Flat sheet over RungSC: Solid CorrugatedVC: Vented Corrugated

Construction: Welded

Connectors: All fittings are supplied withnecessary connectors and fasteners

Fitting heights (H): 4, 5, 6, 7

Specifications

General Info

Product Line	Cablofil	Finish	GC
UPC Number	800388283138	Country Of Origin	Mexico

Dimensions

Product Width US	9.0 in	Product Weight US	8.951 lb
Product Volume US	0.656 cu ft	Product Depth US	18.0 in
Product Height US	7.0 in		

Buy American Act Compliance

BAA	Yes