Cablofil
Vertical Support Elbow
Part No. P036778

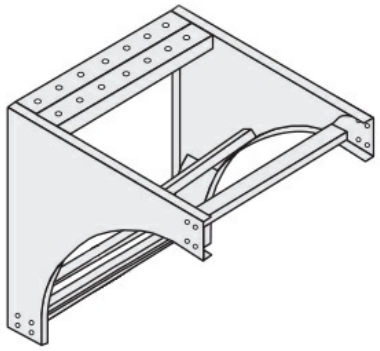

Choose from an extensive selection of metallic ladder tray with a variety of rung and bottom styles to choose from. Finishes include steel, 304L and 316L stainless steel to meet the needs of any application. Rail heights range from 4"" to 7"" and width sizes are available up to 36"".

Features & Benefits

Splices included

Specifications

General Info

Product Line	Cablofil	Finish	GC
UPC Number	800388390485	Country Of Origin	Mexico

Dimensions

Product Width US	15.5 in	Product Weight US	21.191 lb
Product Volume US	3.956 cu ft	Product Depth US	21.0 in
Product Height US	21.0 in		

Buy American Act Compliance

BAA	Yes