Cablofil
Center Hanger Channel
Part No. P081543

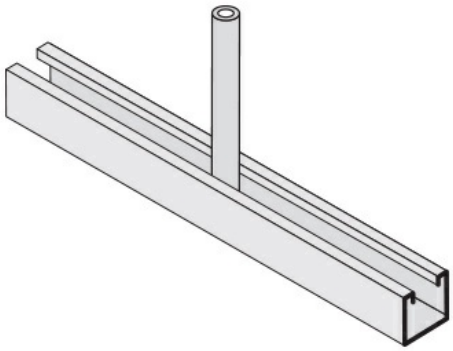

The aluminum I-beam design of ITray is perfect for industrial installations with large diameter cables in long span situations, minimizing total tray width and creating a smooth transition between straight sections and fittings. A structural offset in the sidewall creates strong, mid-span splices that need fewer supports. Each splice snaps in place and stays without holding, Additionally, only four bolts are needed for each splice reducing hardware needs by 50%. These features allow Itray to be installed up to 30% faster than standard tray.

Features & Benefits

Made from 12-gauge strut

Hangers have 9/16'' diameter holes 13/16'' from each end to accept 1/2'' threaded rod

When used with Z-type hold-down clamps, select hanger with flange out dimensions

Specifications

General Info

Product Line	Cablofil	Finish	GC
UPC Number	800388396074	Country Of Origin	Mexico

Dimensions

Product Width US	1.625 in	Product Weight US	2.6 lb
Product Volume US	0.09 cu ft	Product Depth US	12.0 in
Product Height US	8.0 in		

Buy American Act Compliance

BAA	Yes