Cablofil
4H Wall Penetration Sleeve
Part No. P082701

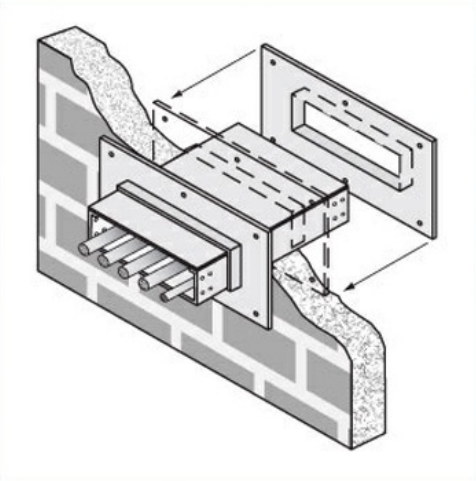

Fabricated cable tray wall sleeves from Legrand, provide safe, rigid and aesthetically pleasing support at a wall requiring cables to continue through the wall. Legrand wall sleeves, WPS, are an economical alternative to the support and finish issues of having cable tray penetrate wall and/or floor. This WPS system provides a rigid support for cable tray. After the sleeve is placed in the wall or floor, the loose collar slides over it. Hardware for the tray connection only is included. Hardware required to mount sleeves to the wall or floor is not included.

Features & Benefits

- Provides a rigid support for cable tray at wall penetrations
- Will fit walls up to 8" thick
- Bonding jumper or ground wire should be in stalled through the pan between the aluminum cable trays on each side of the wall sleeve
- Overall length of the sleeve is 20"
- The opening in thew wall should be within 1" of the normal height and width of the cable tray
- Two pairs of splice plates and fasteners are included for tray attachment

Specifications

General Info

Product Line	Cablofil	Finish	GC
UPC Number	800388466111	Country Of Origin	Mexico

Dimensions

Product Width US	12.0 in	Product Weight US	22.73 lb
Product Volume US	1.389 cu ft	Product Depth US	20.0 in
Product Height US	10.0 in		

Buy American Act Compliance

BAA	Yes