Cablofil
Blind End Plate
Part No. P082947

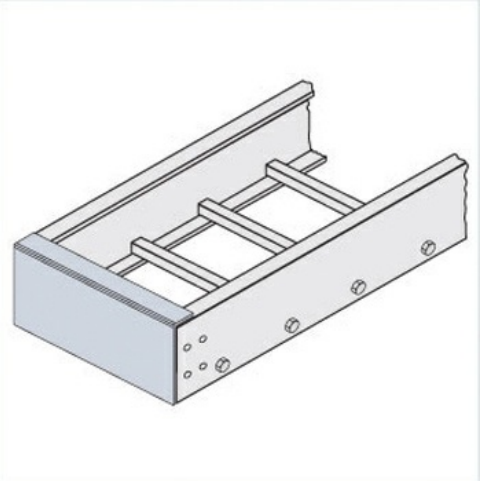

Choose from an extensive selection of metallic ladder tray with a variety of rung and bottom styles to choose from. Finishes include steel, 304L and 316L stainless steel to meet the needs of any application. Rail heights range from 4" to 7" and width sizes are available up to 36".

Features & Benefits

Includes Hardware

Specifications

General Info

Product Line	Cablofil	Finish	Pre-Galvanized
UPC Number	800388515680	Country Of Origin	Mexico

Dimensions

Product Width US	23.75 in	Product Weight US	1.67 lb
Product Volume US	0.075 cu ft	Product Depth US	1.5 in
Product Height US	3.625 in		

Buy American Act Compliance

BAA	Yes