Cablofil
SB-4A-SR12-06 AL 4H STR REDUCER 12/06W
Part No. P320236

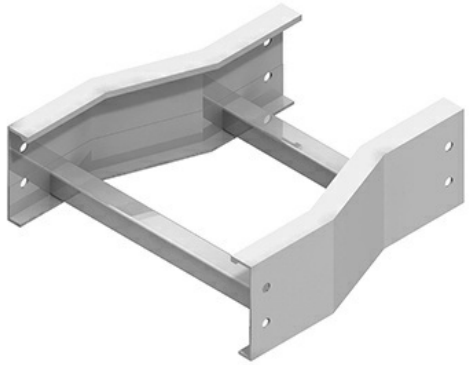

The aluminum I-beam design of ITray is perfect for industrial installations with large diameter cables in long span situations, minimizing total tray width and creating a smooth transition between straight sections and fittings. A structural offset in the sidewall creates strong, mid-span splices that need fewer supports. Each splice snaps in place and stays without holding, Additionally, only four bolts are needed for each splice reducing hardware needs by 50%. These features allow Itray to be installed up to 30% faster than standard tray.

Features & Benefits

Material: Aluminum Alloy 6063

Bottom: LD: 1'' wide rung

Connectors: All fittings are supplied with

Finish: Plain

Construction: Welded

Fitting heights (H): 4, 5, 6, 7

Specifications

General Info

Product Line	Cablofil	Finish	AL
UPC Number	800388108585	Country Of Origin	Mexico

Dimensions

Product Width US	13.5 in	Product Weight US	3.718 lb
Product Volume US	0.596 cu ft	Product Depth US	18.0 in
Product Height US	4.241 in		

Buy American Act Compliance

BAA	Yes