Cablofil
Hanger Brackets
Part No. P602487

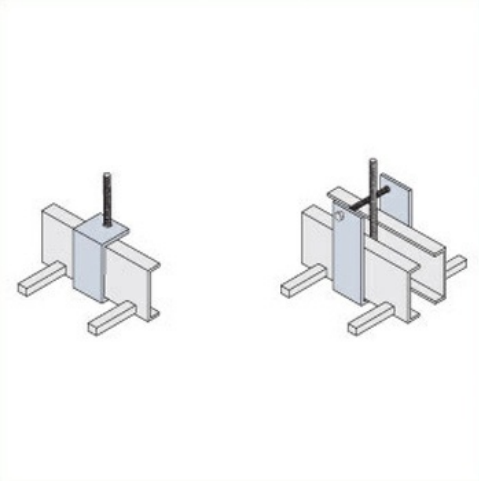

The aluminum I-beam design of ITray is perfect for industrial installations with large diameter cables in long span situations, minimizing total tray width and creating a smooth transition between straight sections and fittings. A structural offset in the sidewall creates strong, mid-span splices that need fewer supports. Each splice snaps in place and stays without holding, Additionally, only four bolts are needed for each splice reducing hardware needs by 50%. These features allow Itray to be installed up to 30% faster than standard tray.

Features & Benefits

Single: Supports a single tray side rail from a 1/2'' threaded rod.

For use with all flange-out ladder and ventilated/trough tray systems.

Double: Support two tray side rails that are installed side-by-side from a single 1/2'' threaded rod.

Safe load = 300 lbs. per bracket.

Specifications

General Info

Product Line	Cablofil	Finish	Pre-Galvanized
UPC Number	800388525597	Country Of Origin	United States

Dimensions

Product Width US	2.875 in	Product Weight US	0.75 lb
Product Volume US	0.017 cu ft	Product Depth US	2.0 in
Product Height US	5.062 in		

Buy American Act Compliance

BAA	Yes