Cablofil
**Cable Dropout**
Part No. P604232

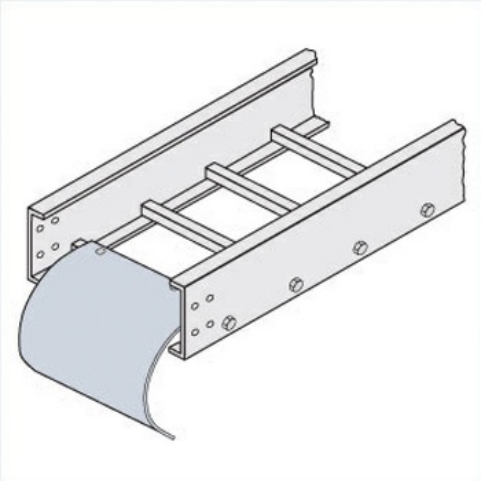

Choose from an extensive selection of metallic ladder tray with a variety of rung and bottom styles to choose from. Finishes include steel, 304L and 316L stainless steel to meet the needs of any application. Rail heights range from 4" to 7" and width sizes are available up to 36".

## Features & Benefits

Smooth radius for cable drops

## Specifications

### General Info

| | | | |
|---|---|---|---|
| Product Line | Cablofil | Finish | Stainless 316 |

### Dimensions

| | | | |
|---|---|---|---|
| Product Width US | 23.625 in | Product Weight US | 5.611 lb |
| Product Volume US | 0.837 cu ft | Product Depth US | 7.0 in |
| Product Height US | 8.749 in | | |