Cablofil
Standard Splice Plate
Part No. P606941

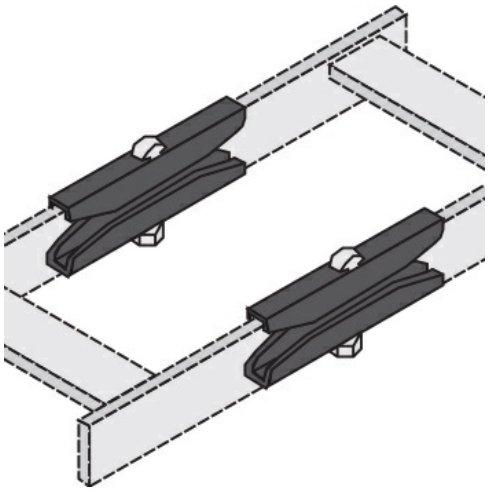

Finishes include steel and 316L stainless steel to meet the needs of any application. Rail heights range from 4"" to 7"".

Features & Benefits

All splices are supplied in pairs.

Type 316 stainless steel fasteners are standard on stainless steel systems, but are available as an option on all aluminum and steel systems.

Bonding jumpers are required for all expansion splice plates, adjustable connectors, and tray discontinuities.

Geomet fasteners are standard on aluminum and steel cable tray systems.

Sufficient connector pairs with fasteners are automatically included with each shipment of straight sections and fittings. Extras for field cuts or spares must be ordered separately.

Specifications

General Info

Product Line	Cablofil	Finish	Hot Dipped Galvanized
UPC Number	800388479326	Country Of Origin	Mexico

Dimensions

Product Weight US	0.667 lb	Product Height US	3.5 in

Buy American Act Compliance

BAA	Yes