Cablofil
Double Strut Bracket
Part No. P642691

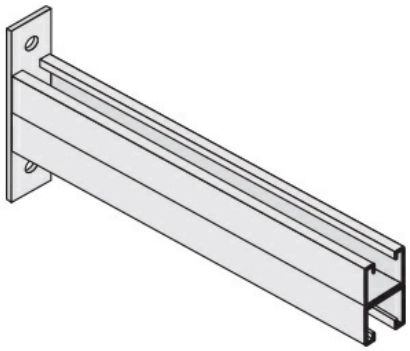

The aluminum I-beam design of ITray is perfect for industrial installations with large diameter cables in long span situations, minimizing total tray width and creating a smooth transition between straight sections and fittings. A structural offset in the sidewall creates strong, mid-span splices that need fewer supports. Each splice snaps in place and stays without holding, Additionally, only four bolts are needed for each splice reducing hardware needs by 50%. These features allow Itray to be installed up to 30% faster than standard tray.

Features & Benefits

Strong heavy gage steel construction

Specifications

General Info

Product Line	Cablofil	Finish	Stainless 316
UPC Number	800388531741	Country Of Origin	United States

Dimensions

Product Width US	2.0 in	Product Weight US	3.631 lb
Product Volume US	0.049 cu ft	Product Depth US	7.0 in
Product Height US	6.0 in		

Buy American Act Compliance

BAA	Yes