Cablofil
Blind End Plate
Part No. P644693

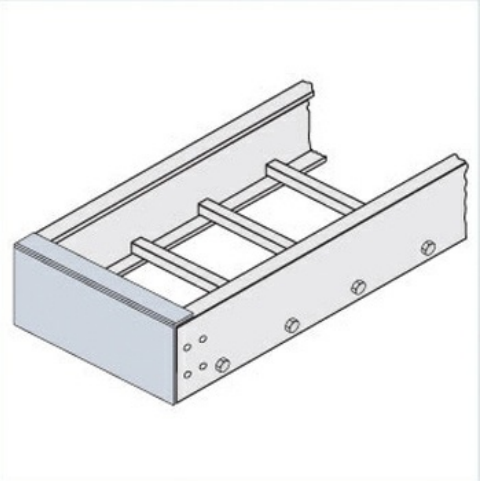

Choose from a full range of cable bracing options for your seismic installation including cables, clips, brackets and installation tools

Features & Benefits

Includes hardware

Specifications

General Info

Product Line	Cablofil	Finish	Pre-Galvanized
Country Of Origin	Mexico		

Dimensions

Product Weight US	1.01 lb