Pass and Seymour

Pin & Sleeve Splashproof 63A 380V 440V Inlet

Part No. PS463B3S

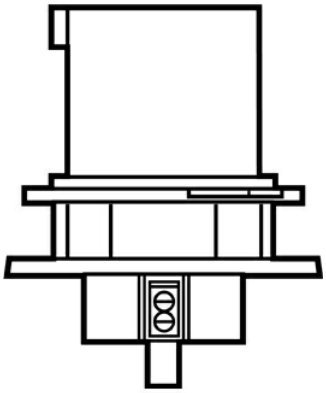

Triple-Pole, 4-Wire, Inlet. 63A, 380/440V.

Features & Benefits

All P&S Watertight Pin & Sleeve plugs, connectors, receptacles, and inlets bring you the features to enhance versatility, reliability, and safety.

And all feature chemical-resistant thermoplastic construction.

An exclusive, hinged cord grip eliminates loose parts that get lost.

North American products come completely ready to wire, for quick, simple installation.

Shrouded, nickel-plated, solid-brass pins provide corrosion protection and excellent conductivity.

Specifications

General Info

Product Line	Pass & Seymour	Color	Gray
Country Of Origin	United States		

Dimensions

Product Width US	4.5 in	Product Height US	4.5 in
Product Length US	4.25 in		