Wiremold
RFB6 Series Barrier Kit
Part No. RFB6KIT

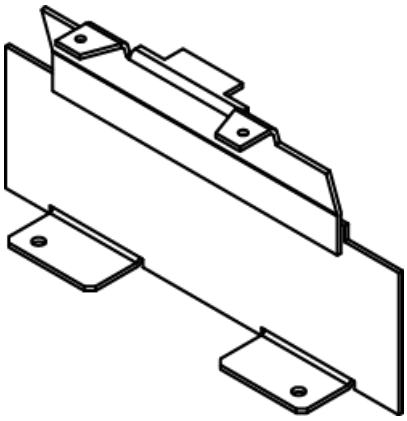

Barrier kit used to separate power and communication wires in partition feed covers. FloorPort Partition Feed Covers sold separately. NOTE: For RFB6 Series Floor Boxes only.

Features & Benefits

Barrier kit used to separate power and communication wires in partition feed covers. FloorPort Partition Feed Covers sold separately. NOTE: For RFB6 Series Floor Boxes only.

Specifications

General Info

Product Line	Wiremold	UPC Number	786564073826
Country Of Origin	United States	Construction	Die Cast
Application Sector	Commercial	Standard	cULus Listed Underfloor Raceway Fittings: File E11912 Meets Article 390 of NEC.

Listing Agencies / 3rd Party Agencies

cULus ListingNumber	E2961	cULus Listed	Yes

Additional Information

RoHS Compliant	Yes