Wiremold

RFBA 2G & 4G Furniture Feed Barrier Kit

Part No. RFBA24FF

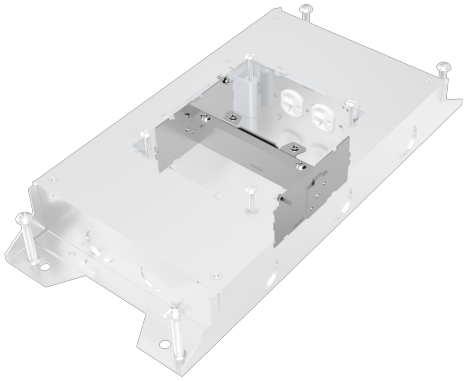

Your go-to floor box just got better. Resource RFB Series Floor Boxes are designed for maximum efficiency throughout an entire building, bringing versatile recessed activations for power and data services to open space areas or directly to workstations. No matter what size you choose, components and accessories work across the entire line interchangeably. Simply mix-and-match as needed for your project. Improved wire and cable routing makes wire pulling much easier in adjacent compartments and around corners. Available in 2-, 4-, 6- and 10-gang models with a variety of covers, colors and profiles.* Installs in tile, stone, carpet, terrazzo, wood and polished concrete. Perfect for many applications, including schools, financial institutions, commercial office buildings, hospitality and residential.

Features & Benefits

- Required for use with furniture feed covers
- Covers sold separately
- Dual service furniture feed: Power has 1" threaded screw plug and communication has a combination 1 1/4" and 2" screw plug
- Works with both RFBA2 and RFBA4 floor boxes

Specifications

General Info

Product Line	Wiremold	Color	Gray
Finish	Pre-Galvanized	UPC Number	786564105770
Country Of Origin	United States	Application Sector	Commercial
Standard	UL514		

Listing Agencies / 3rd Party Agencies

cULus Listed	Yes

Buy American Act Compliance

NAFTA	Yes

Additional Information

RoHS Compliant	Yes	Product Has Potential to Contribute to LEED	Yes